CLASS

9

SAMPLE PAPER

# CREST Mathematics Olympiad (CMO)

Syllabus for CMO is available at https://www.crestolympiads.com/cmo-syllabus

## Pattern And Marking Scheme

| Class | Topic/Section | No. of Questions | Marks per Questions | Total Marks |
|---|---|---|---|---|
| | Practical Mathematics | 25 | 1 | 25 |
| 1st to 4th | Achiever's Section | 10 | 2 | 20 |
| | **Grand Total** | **35** | - | **45** |
| | Practical Mathematics | 40 | 1 | 40 |
| 5th to 10th | Achiever's Section | 10 | 2 | 20 |
| | **Grand Total** | **50** | - | **60** |

---

**1.** If $(x + 1)$ is a factor of $x^n + 1$, then which of the following statements is true?

(a) n is an odd integer
(b) n is an even integer
(c) n is a negative integer
(d) n is a positive integer

---

**2.** From a point in the interior of an equilateral triangle, perpendiculars are drawn on three sides. The lengths of the perpendiculars are 14 cm, 10 cm and 6 cm. Find the area of the triangle.

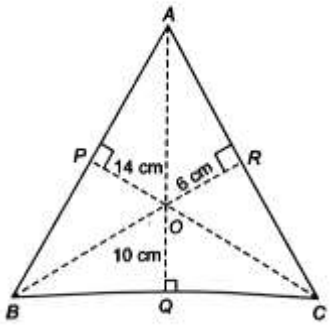


(a) $150\sqrt{3}$ m$^2$
(b) $275\sqrt{3}$ m$^2$
(c) $300\sqrt{3}$ m$^2$
(d) $345\sqrt{3}$ m$^2$

**3.** A wooden bookshelf has external dimensions as follows: Height = 110 cm, Depth = 25 cm, Breadth = 85 cm.
The thickness of the plank is 5 cm everywhere. The external faces are to be polished and the inner faces are to be painted. If the rate of polishing is 20 paise per $cm^2$ and the rate of painting is 10 paise per $cm^2$, then find the total expenses for polishing and painting the surface area of the bookshelf.

(a) Rs. 3820 (b) Rs. 4530
(c) Rs. 5270 (d) Rs. 6390

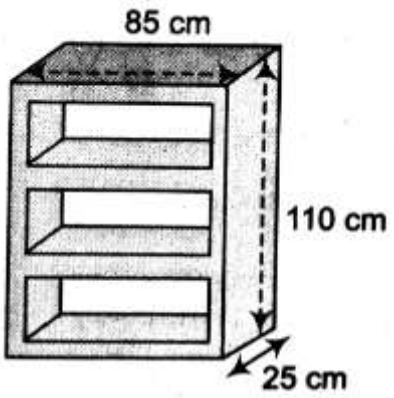


**4.** In the given graph, triangle ABC and triangle ABD are equilateral triangles. Find the respective co-ordinates of points C and D.

(a) (0, a√3) (0, a√3) (b) (0, -a√3) (0, a√3)
(c) (0, a√3) (0, -a√3) (d) (a√3, 0) (-a√3, 0)

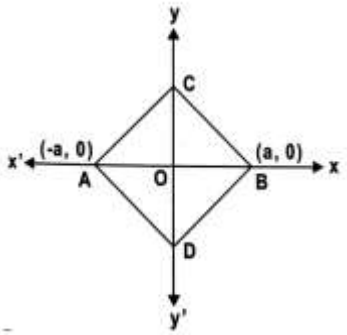

**5.** The diagonals AC and BD of a parallelogram ABCD intersect at O. P is a point such that AP = 1/4 AC. Which of the following statements is true?

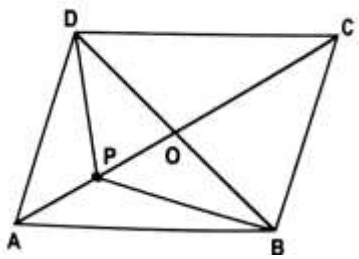


(a) area(ΔADP) = area(ΔAPB)
(b) area(ADP) = area(ΔDOC)
(c) area(ΔADP) = area(ΔBCD)
(d) area (ΔADP) = area(ΔADB)

---

**6.** A women sells to the first customer half her stock and half her apple, to the second customer she sells half her remaining stock and half an apple and so on to the third and fourth customer. She finds that she has 15 apples left now. How many apples did she have before she started selling?
(a) 63
(b) 127
(c) 240
(d) 289

---

**7.** Which of the following statements is incorrect?
(a) If a point lies between A and B, then AP < AB and BP < AB.
(b) A line segment has fixed length.
(c) One point always determines a unique line.
(d) A line segment can be produced indefinitely on either side.

---

**8.** The mean wage of 150 labourers working in a factory running with three shifts with 60, 40 and 50 labourers is Rs. 114. The mean wage of 60 labourers working in the first shift is Rs. 121.50 and that of 40 labourers working in the second shift is Rs. 107.75. Find the mean wage of those who are working in the third shift?
(a) Rs. 100
(b) Rs. 110
(c) Rs. 120
(d) Rs. 115.75

# Achiever's Section

**9.** Which of the following statements is correct?
Statement A: Two triangles are said to be congruent if two sides and an angle of one triangle are respectively equal to the two sides and an angle of the other.
Statement B: Two triangles are congruent if two sides and the included angle of one triangle are equal to the corresponding two sides and the included angle of the other.
(a) Statement A is false and statement B is the correct explanation of A.
(b) Statement A is true and statement B is the correct explanation of A.
(c) Statement A is true and statement B is false.
(d) Statement A is false and statement B is true.

---

**10.** 400 students of class IX of a school appeared for a test of 100 marks in the subject of mathematics and the data about the marks secured is presented in the table.

| Marks secured | 0-25 | 26-50 | 51-75 | Above 75 |
|---|---|---|---|---|
| Number of students | 50 | 220 | 100 | 30 |

If the result card of a student is picked up at random, then what is probability that the student has secured more than 50 marks?
(a) 0.523 (b) 0.532
(c) 0.325 (d) 0.352

# Answers

1. (a), 2. (c), 3. (c), 4. (c), 5. (a), 6. (d), 7. (d), 8. (b), 9. (a), 10. (c).